Pier import

NOTICE DE MONTAGE
30043744 - VESTIAIRE MELBOURNE

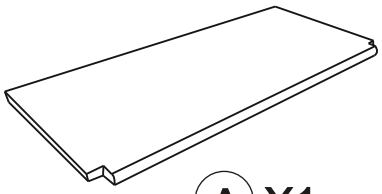

A X1



B X1

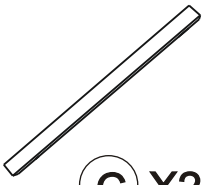

C X2

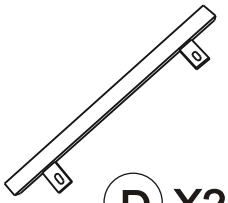

D X2

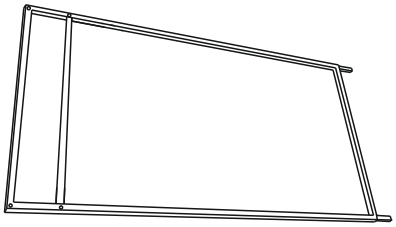

E X1

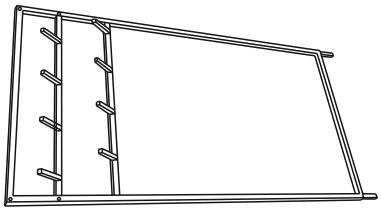

F X1

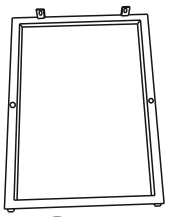

G X2

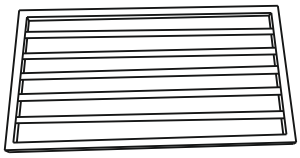

H X1



I X8

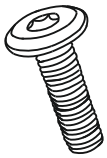

J X12



K X8

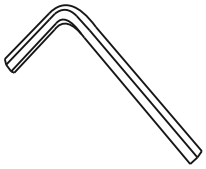

L X1

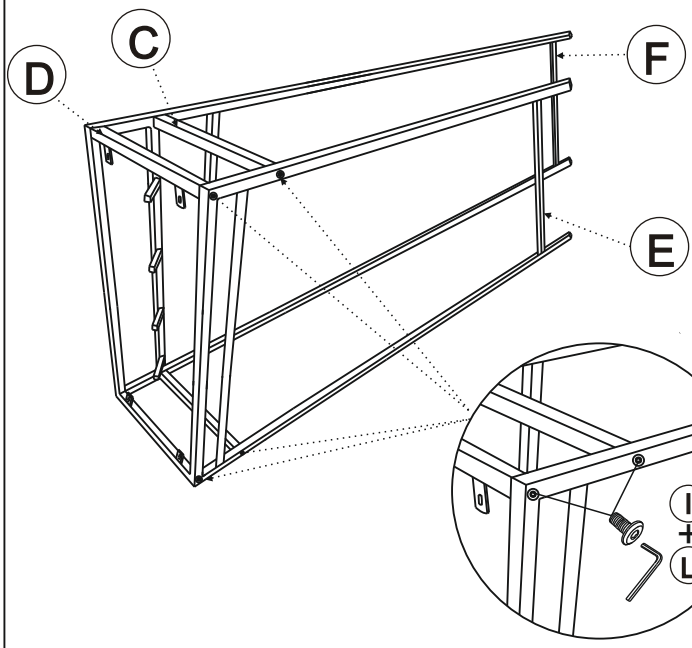

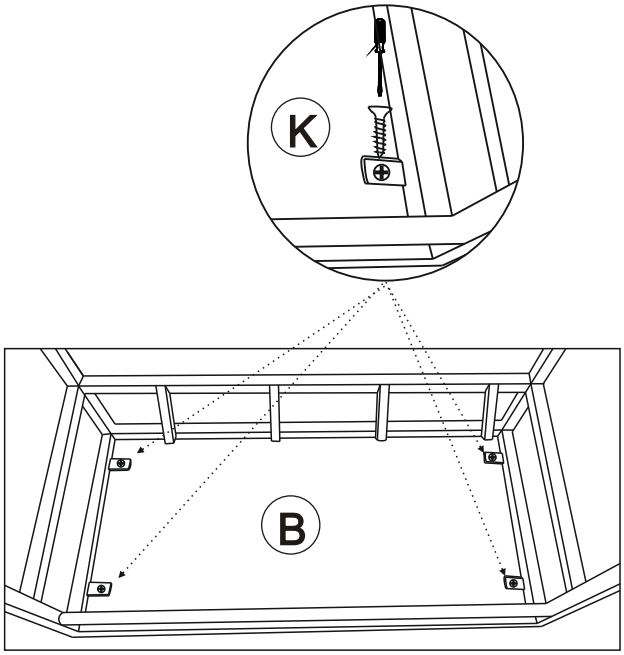

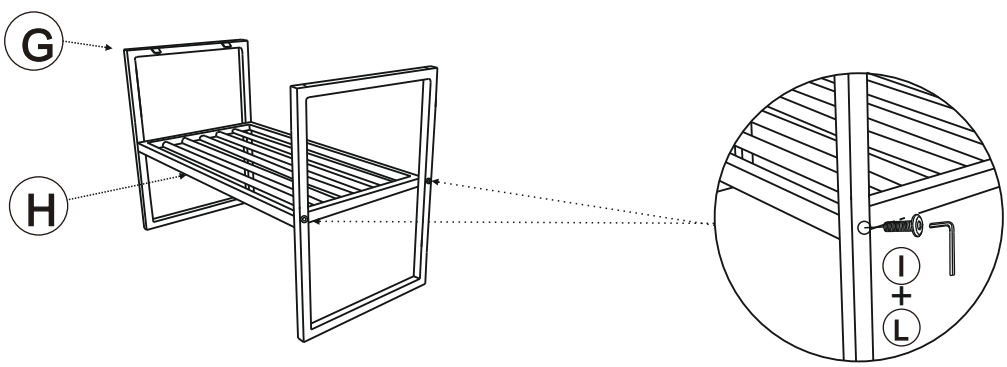

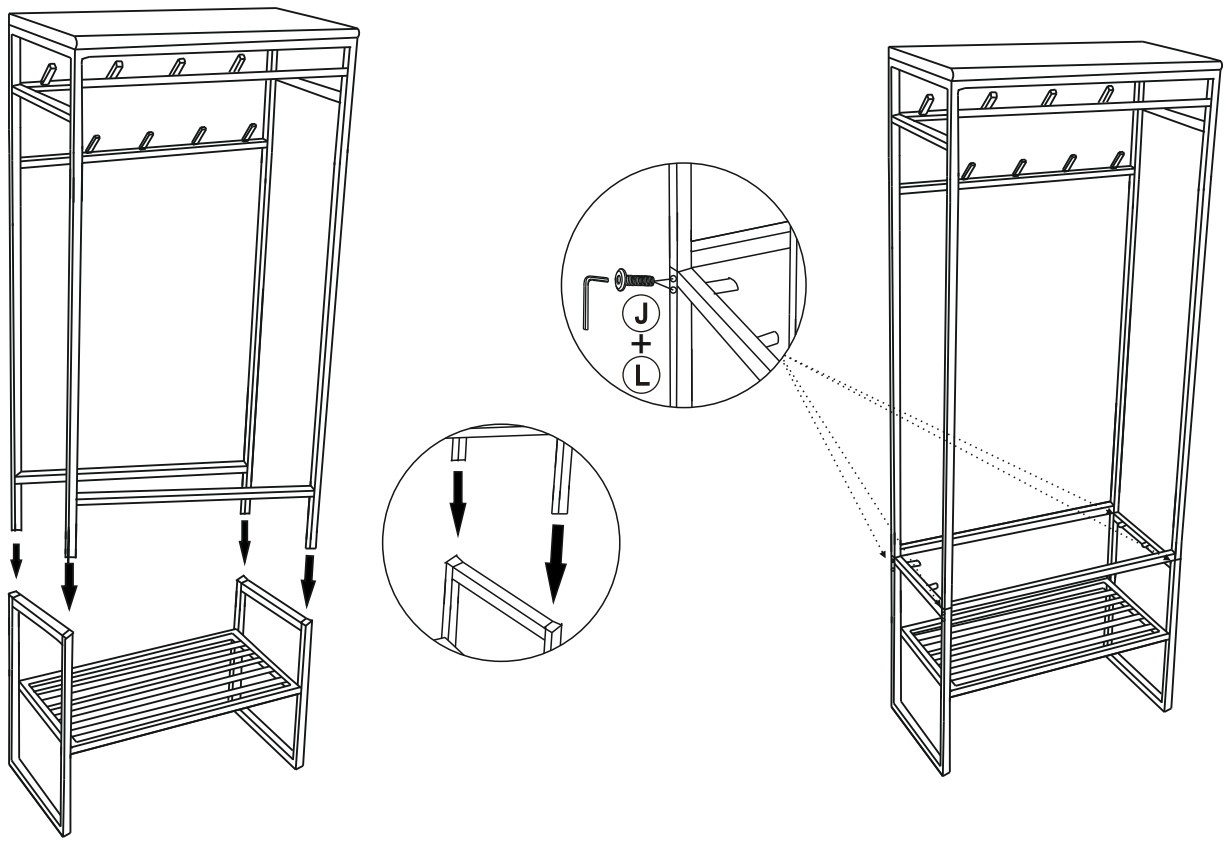
J
+
L

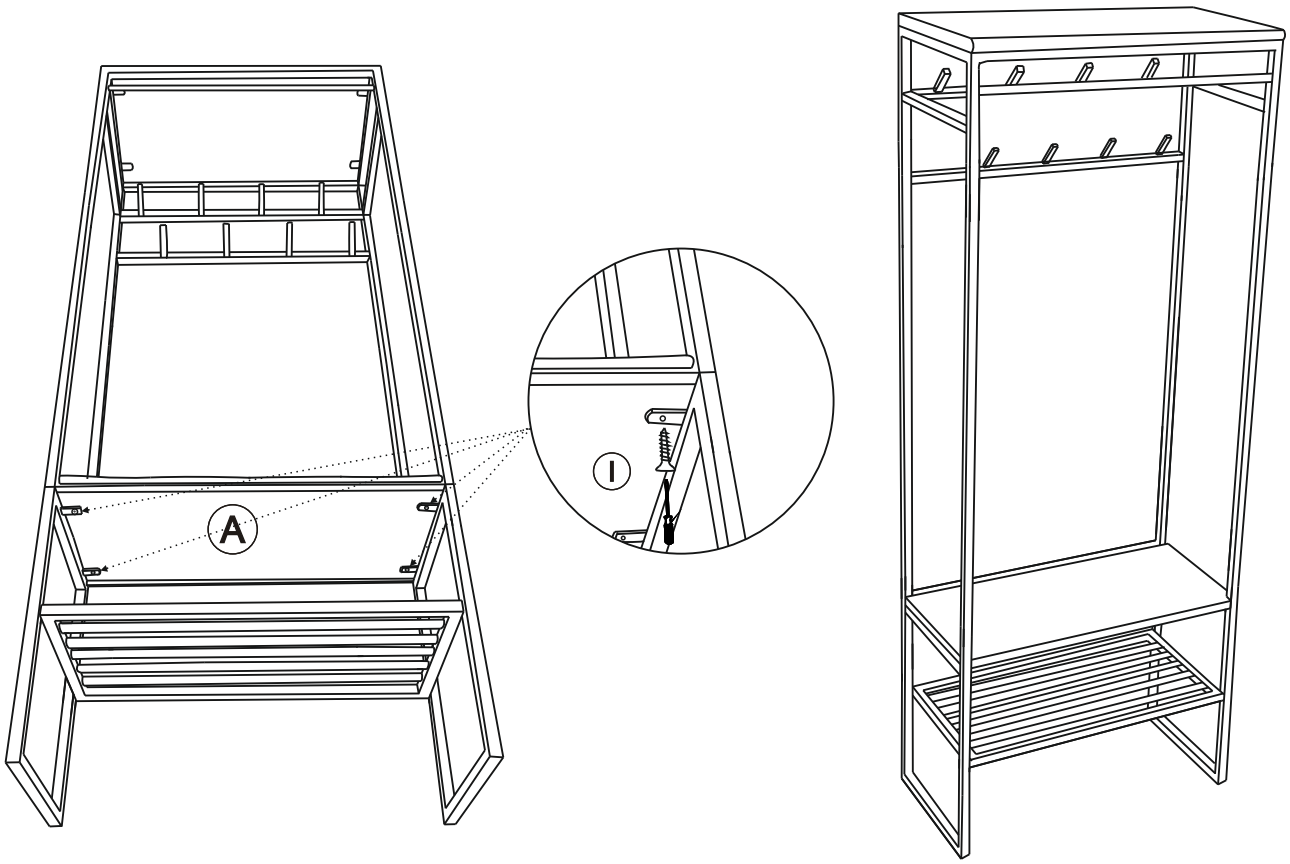
A
I