DINING CHAIR SPIKE

zuiver

COMPONENT PARTS

Step1

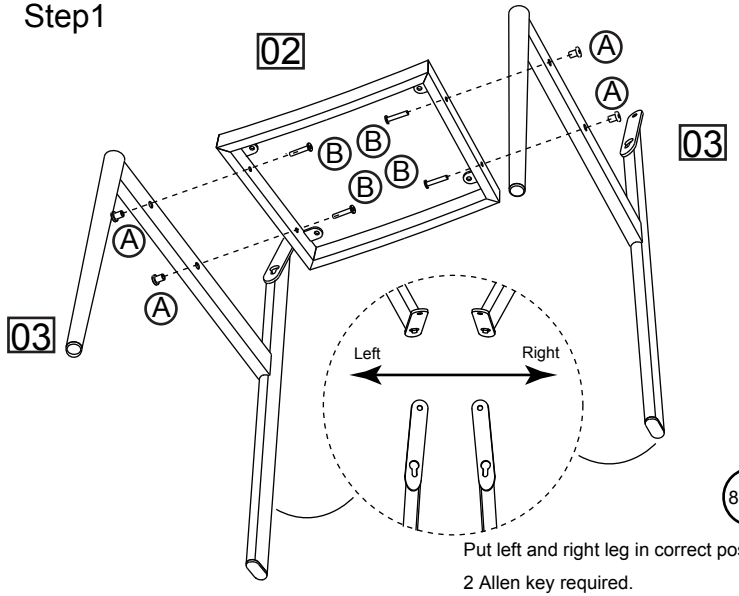

Put left and right leg in correct position .
2 Allen key required.
Screw tightness 80%.

Step2

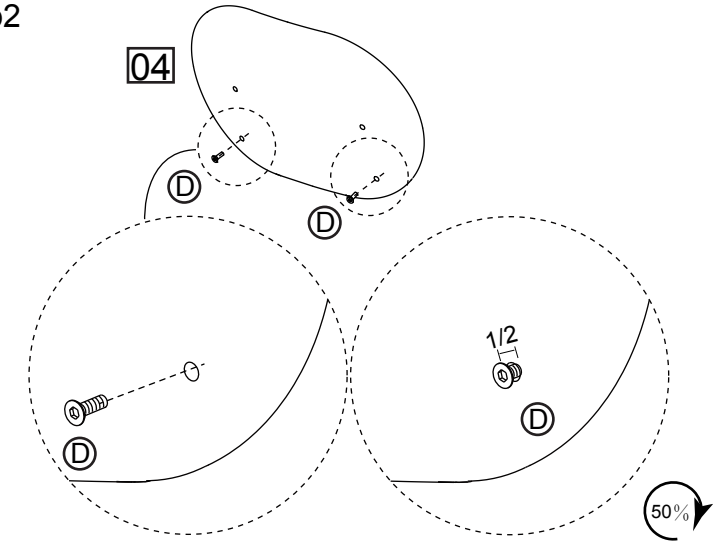

Fix the backrest bottom 2 screws.
Screw tightness 50%.

Step3

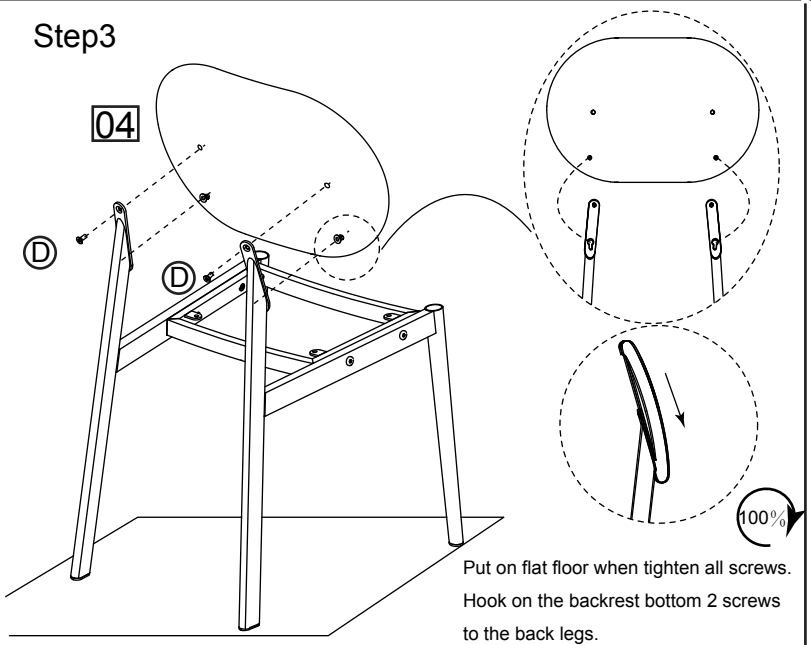

Put on flat floor when tighten all screws.
Hook on the backrest bottom 2 screws
to the back legs.
Fix the backrest top 2 screws.
Tighten the metal frame screws 100%.

Step4

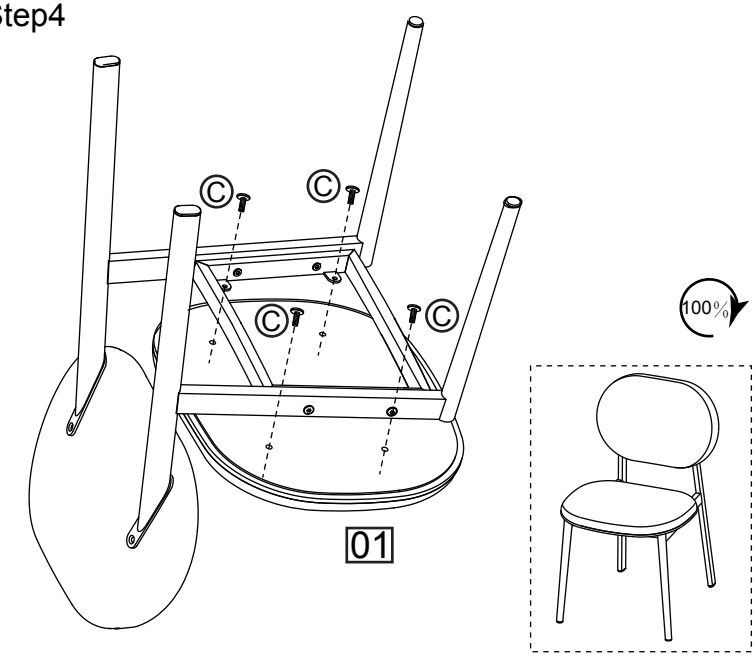

FITTIGS

Ⓐ	(M6×12MM×φ9MM)	×4
Ⓑ	(M6×30MM)	×4
Ⓒ	(M6×15MM)	×4
Ⓓ	(M6×15MM)	×4

COMPONENT CHECKLIST

PART	No.	Qty.	
Seat	01	1	☐
Tray	02	1	☐
Leg	03	2	☐
Backrest	04	1	☐

TOOLS REQUIRED

×2
Allen key（supplied）