Pier import

NOTICE DE MONTAGE
30045179 - CHAISE TAJ







1

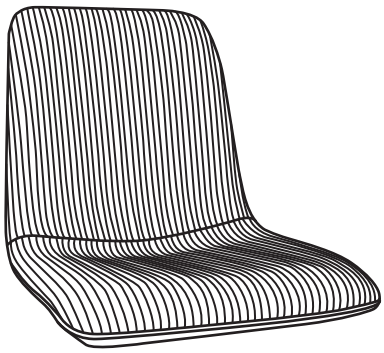

2

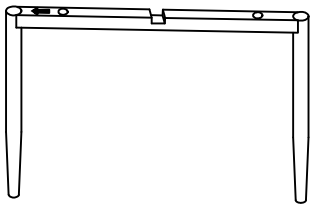

3

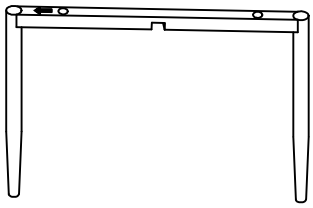

1	1x
2	1x
3	1x

A	B	C	D	E
 M6x16mm 4x	 M6x35mm 4x	 Ø16xØ6x1.5mm 4x	 5MM 1x	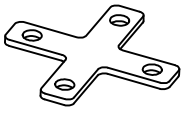 15x85x85 1x

①

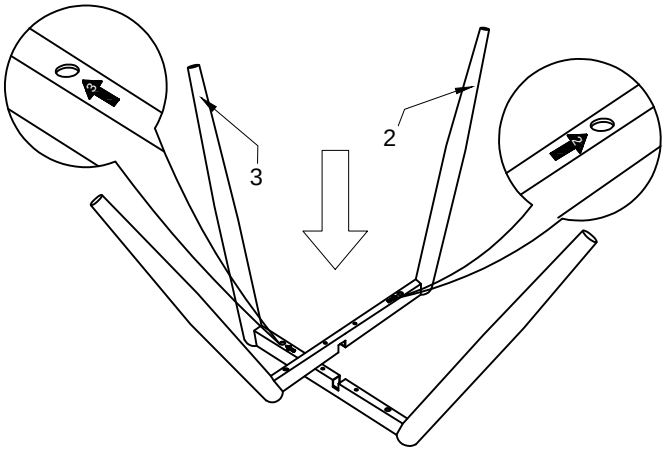

②

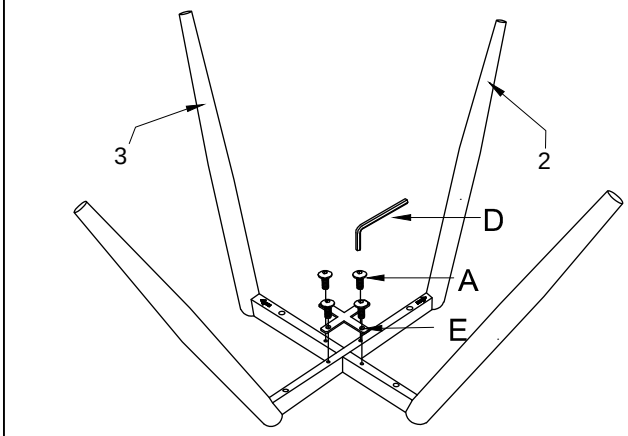

③

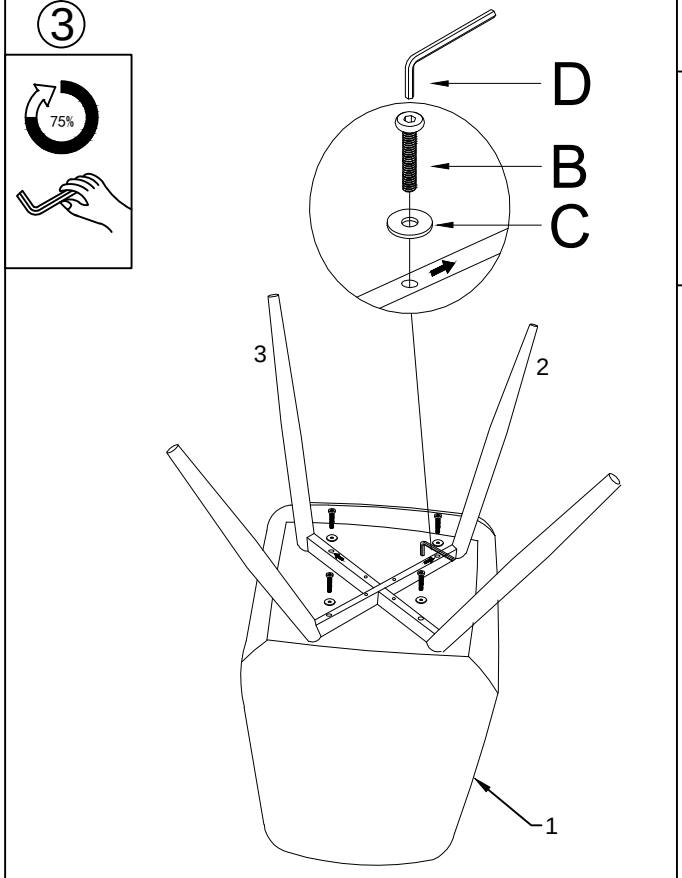

④

