Pier import

NOTICE DE MONTAGE
30044966 - CHAISE MALANG

1 X1PC 	2 X1PC 	3 X1PC 	4 X1PC	5 X1PC 	
A X2PCS  M6*13mm	B X2PCS  M6*30mm	C X6PCS  M6*16mm	D X1PCS 	E X10PCS 	

ETAPE 1

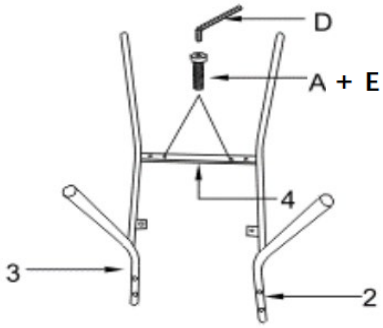

ETAPE 2

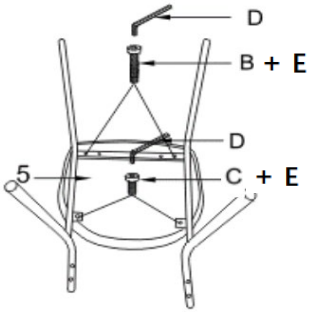

ETAPE 3

