Pier import

NOTICE DE MONTAGE
30045030 - CONSOLE LANDAISE

A	B	C	H1	H2
	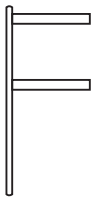			
1PC	4PCS	1PC	16PCS	1PC

1

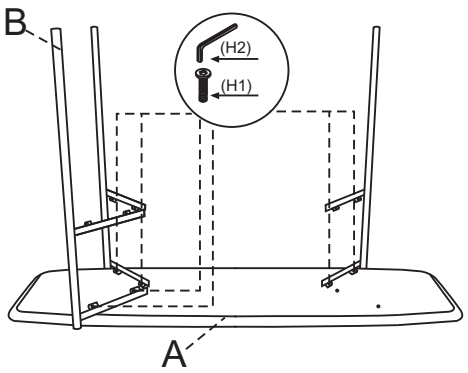

2

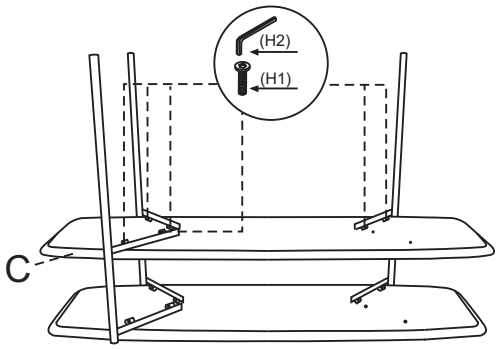

3

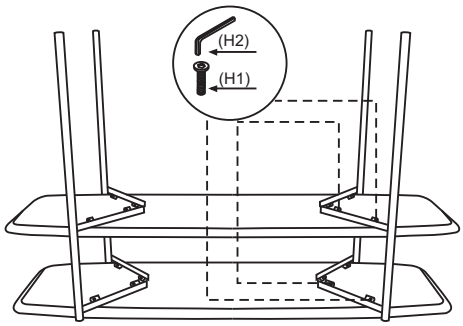

4

