Pier import

NOTICE DE MONTAGE
30045207 - TABLE ASCOLI

A	B	C	D	E	F
				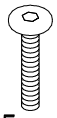	
⌀8*16mm 28 PCS	M8*14mm 12 PCS	M8*16mm 8 PCS	M8*25mm 4 PCS	M8*55mm 4 PCS	1 PC

1	2	3	4	5
	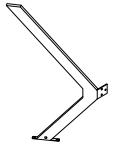		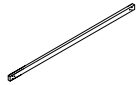	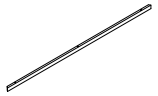
1 PC	2 PCS	2 PCS	1 PC	2 PCS

1

75%

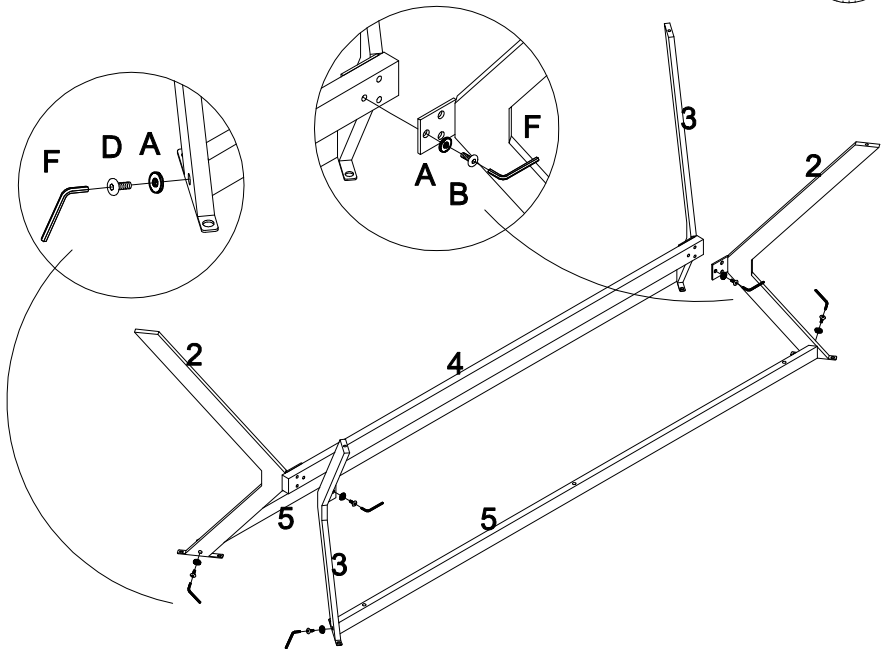

2

100%

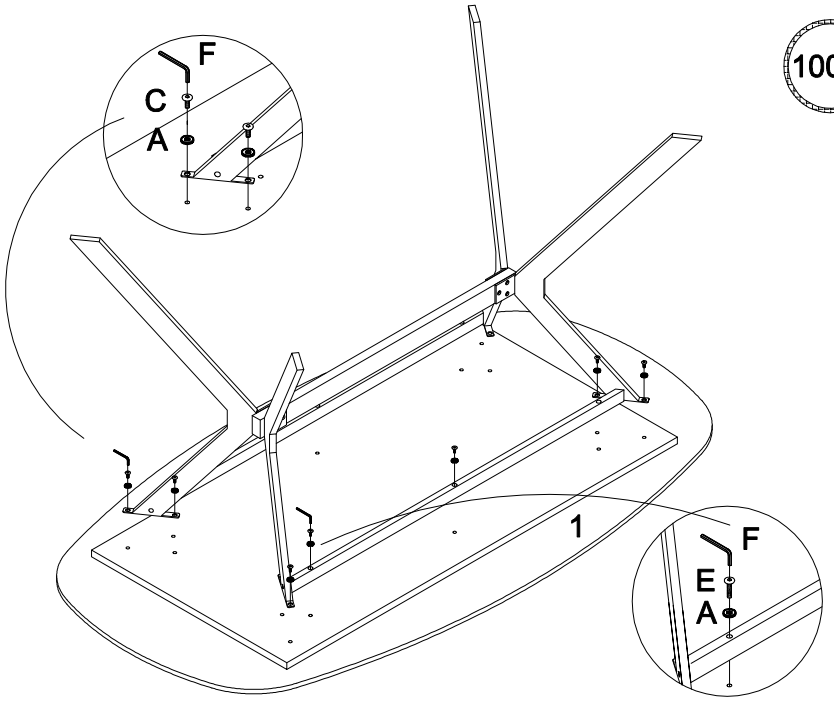

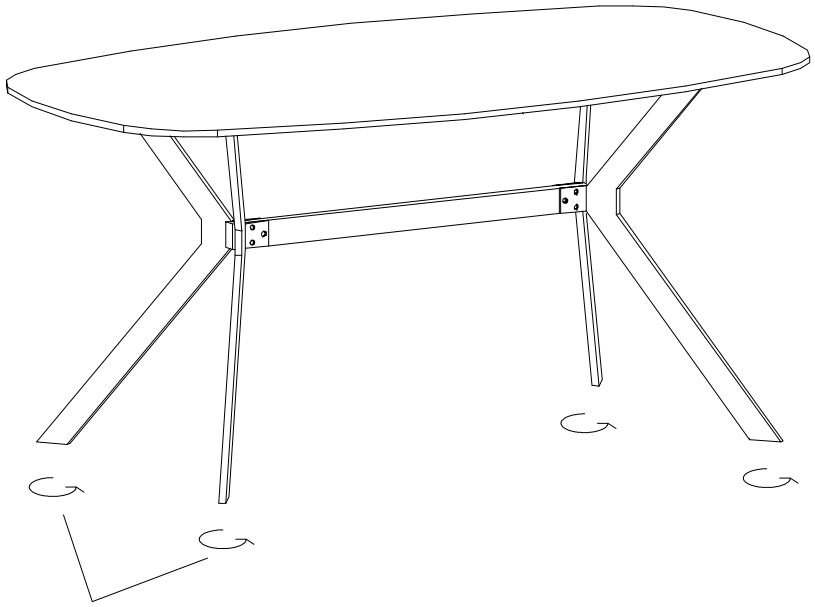

Pieds ajustables