Pier import

NOTICE DE MONTAGE
30045805 - FAUTEUIL MELBOURNE

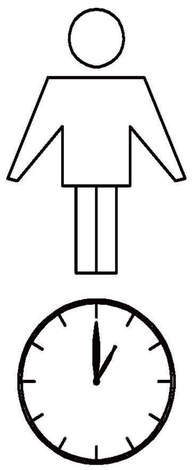

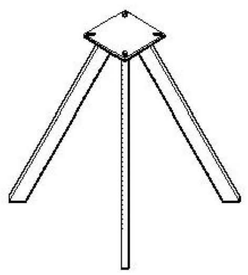

① x1

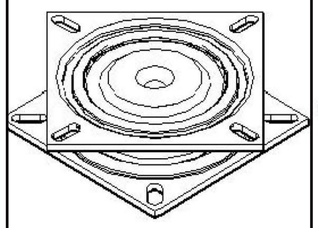

② x1

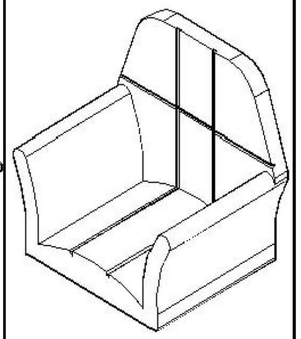

③ x1

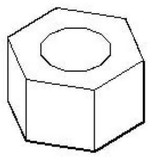

④ x4

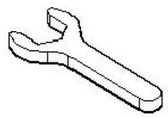

⑤ x1



⑥ x2

M6 xL30



⑦ x2

M6 xL20



⑧ x4

M6 xL12

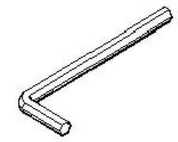

⑨ x1

1

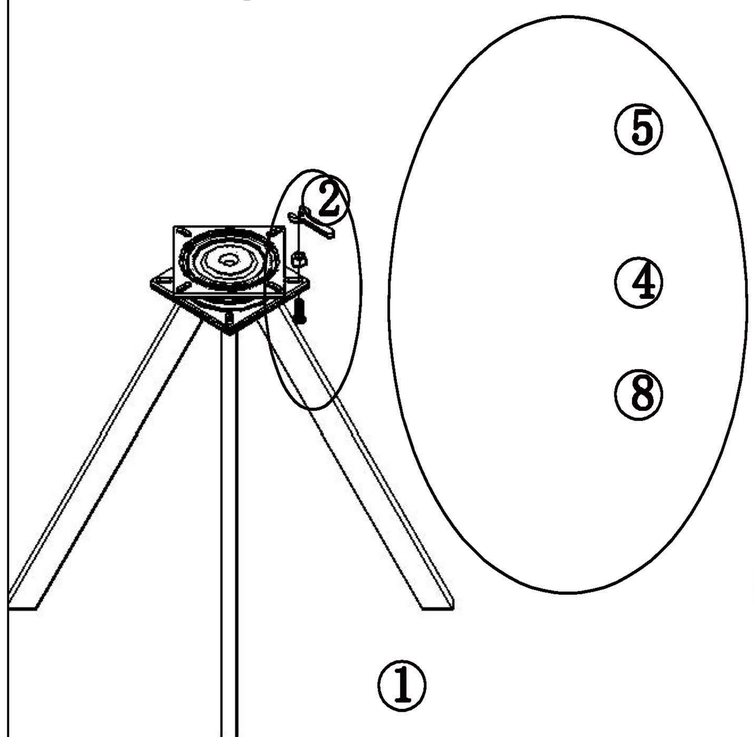

2

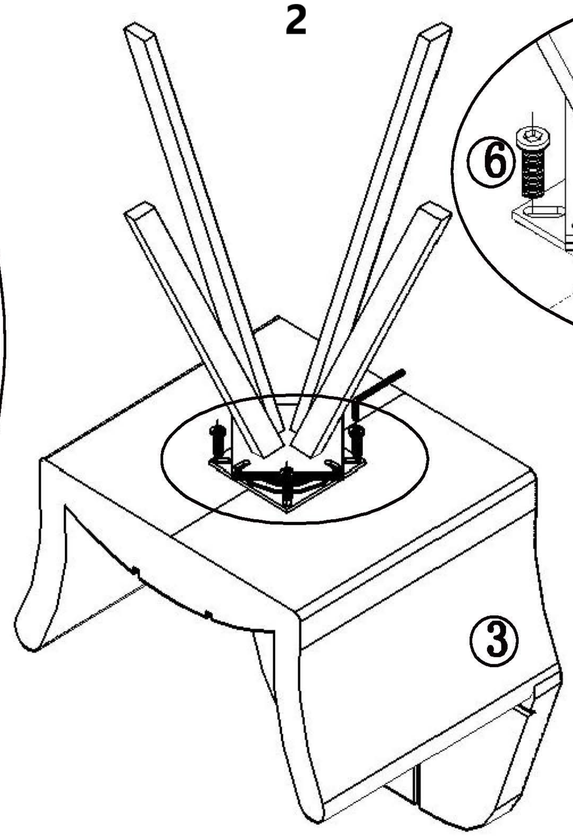

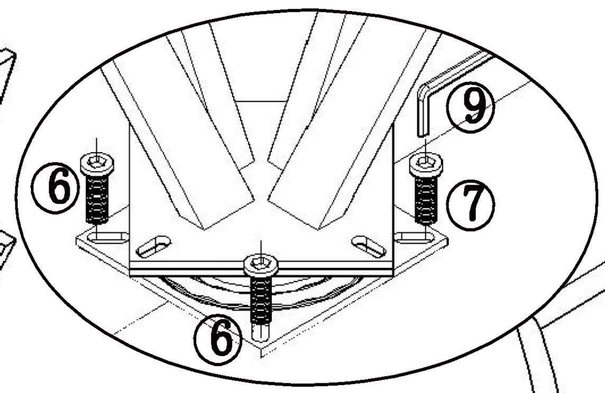

3

