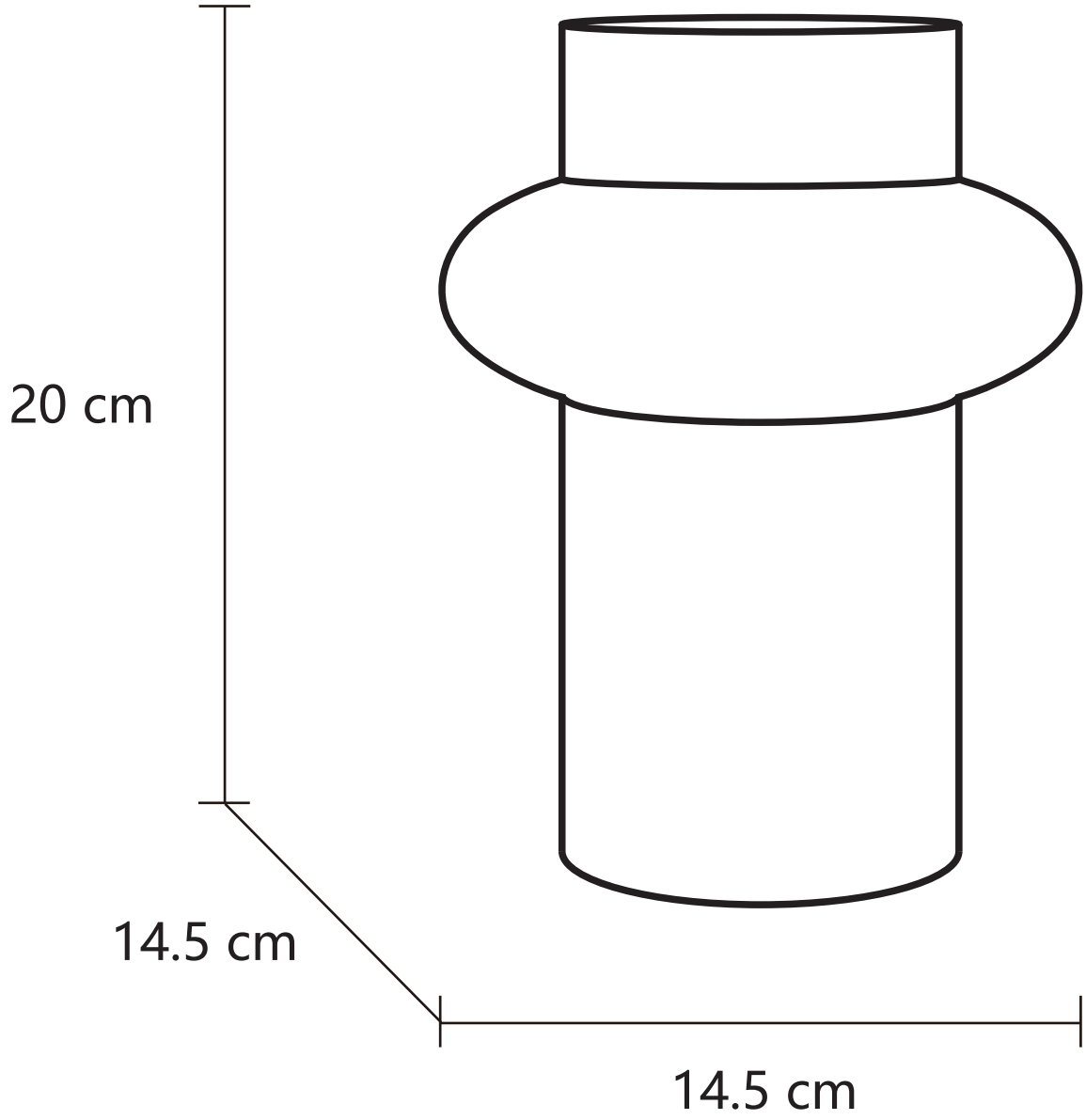
20 cm
14.5 cm
14.5 cm